Water Leveler (New Construction)

- **All Plastic Worry-Free 3/8" Float Valve**
- **Easy to Install**
- **3/4" or 1/2" Water Inlet**
- **Bottom Port Equalizer Line is 1" Socket**
- **Optional Overflow Line is 1/2" Socket**
- **1.5" & 2" Adapters Included**

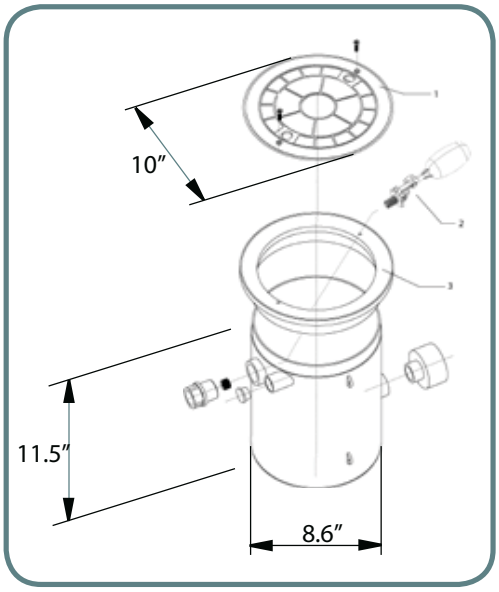





Thermoplastic Float Assembly for CMP Unit

25504-000-100	3/8" MIP
25504-000-200	1/2" MIP

Auto Water Leveler, Round Lid

1 per box

25504-100	White Lid & Collar
25504-101	Gray Lid & Collar
25504-109	Tan Lid & Collar

Auto Water Leveler, Square Lid

(Square Lid & Collar Float Over Body)

1 per box

25504-300	White Lid & Collar
25504-301	Gray Lid & Collar
25504-309	Tan Lid & Collar

Replacement Parts on Page A89