Levolor®

Electronic Water Leveler

Model K-1100

INSTALLATION INSTRUCTIONS



Levolor is the alternative choice of contractors over mechanical floats; because it's trouble-free, easy to install and there are no moving parts. LEVOLOR is a computer-controlled device that detects a low water condition and automatically replaces the water to a pre-set level. LEVELOR works well on new and existing pools and spas. LEVOLOR can be used in any situation where a consistent liquid level is desired (i.e., pools, spas, aquariums, ponds, reservoirs, storage tanks, water cooling towers, etc.).

IMPORTANT SAFETY INSTRUCTIONS

1. READ AND FOLLOW ALL INSTRUCTIONS.
2. WARNING: To reduce the risk of injury, do not permit children to use this product unless they are closely supervised at all times.
3. SAVE THESE INSTRUCTIONS.
4. Sensor wires must be continuous and not spliced. Call factory with any questions: 1-800- 844-8514
5. Solder all low voltage wire connections when possible and always use grease-filled wire nuts on low voltage connections.

Electronic Water Level Management Systems

LEVOLOR REQUIRES THREE COMPONENTS

1. Sensor 2. Control Box 3. 24VAC Solenoid Valve (optional)

System Dynamics provides the controller and the sensor with 50 ft. - 200 ft. of wire. The sensor wire must be continuous. When using the static pipe method glue all one inch fittings only. Do not glue 2 inch fittings. The solenoid valve can be obtained from SDI or perhaps a pool distributor. We recommend the use of a one inch solenoid valve and 18 gauge wire direct burial style. The SDI supplied valve is made by Weathermatic and is a SOL-100. It has a pressure rating which cannot exceed 125 PSI.

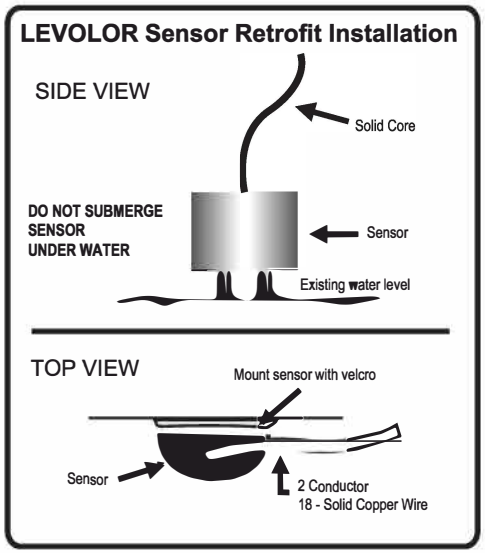

The Sensor is half-moon or 1" slip style with 50 ft. - 200 ft. of wire at the top and two stainless steel contacts at the bottom. The half-moon Sensor can be mounted with a suitable adhesive in the skimmer throat behind the whir door arc.
The slip style can be mounted in a stand pipe or static pipe. Cut off the sensor you are not using.
(see page 4 for more details)

A FEATURE OF THE LEVOLOR IS A TIME DELAY

This feature acts to prevent wave action from overfilling the pool and prevents water hammer conditions on the solenoid valve.

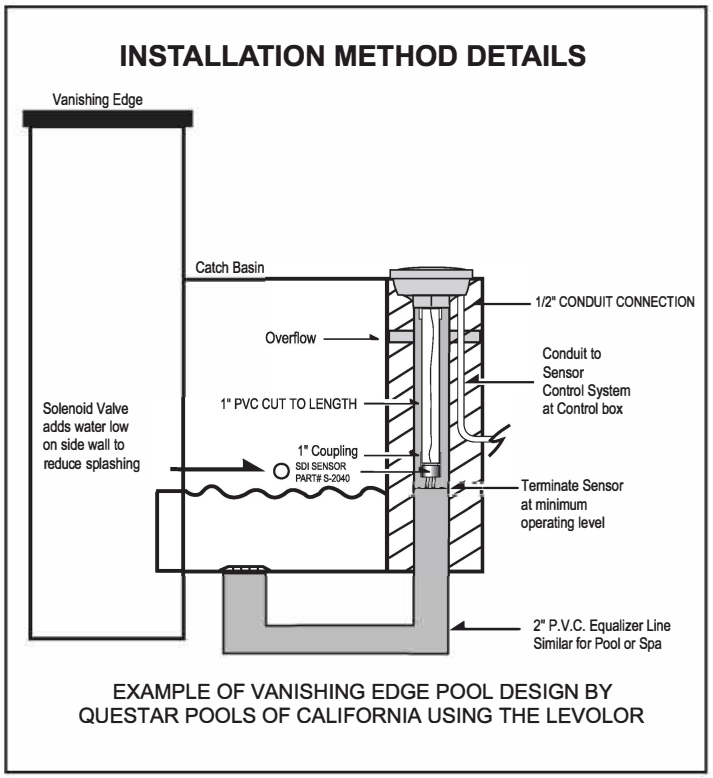

EXAMPLE OF VANISHING EDGE POOL DESIGN BY QUESTAR POOLS OF CALIFORNIA USING THE LEVOLOR

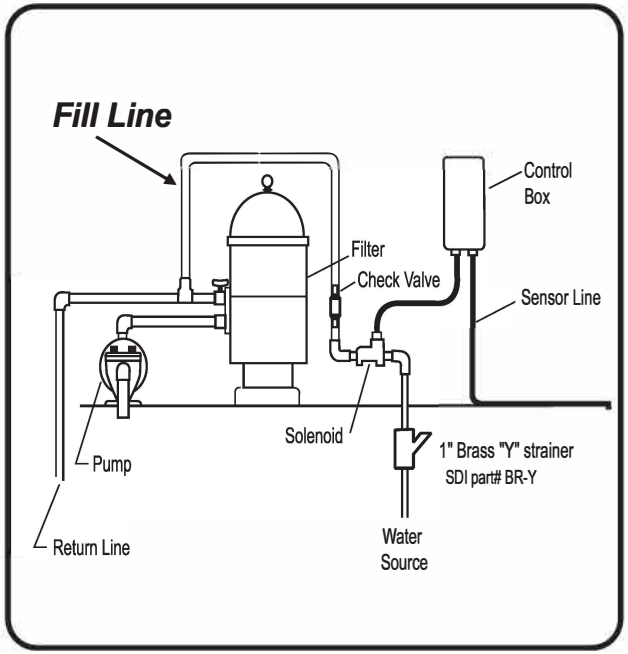

Electronic Water Level Management Systems

WEATHERMATIC VALVE DIRECTIONS

Your Levolor comes with a 1" solenoid valve that runs 24 Vac. The directonal water flow arrow is located on the valve behind the solenoid. On top of the valve is a flow control knob (+) that regulates the water flow up to 30 GPM. There is a Manual On/Off lever located just below the solenoid. When the lever is in the up position ↑ (12'oclock), then the valve is manually opened. When the lever is in the horizontal position → (3 o'clock), then the valve is closed and will only open with the Electronic Water Levolor.

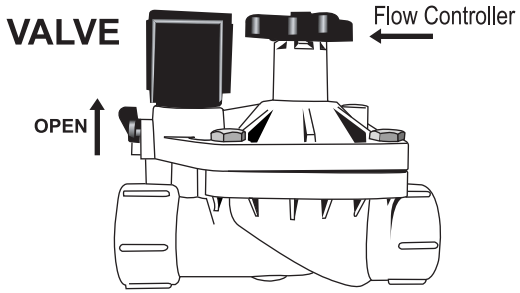

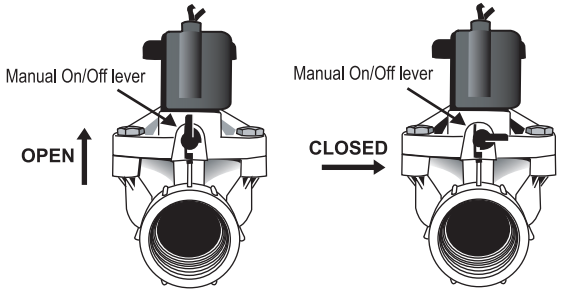

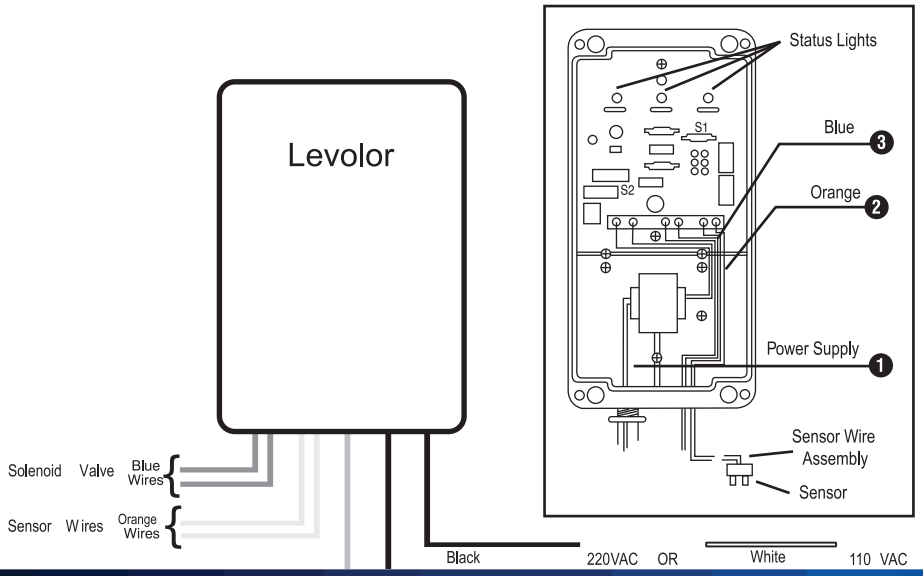

The Control Box is mounted near the Pump and Filter or in any suitable location.The LEVOLOR is available in 110VAC or 220VAC and in most cases should be wired to the load side of the time clock, this wiring method prevents the water supply from operating during unwanted hours of the day. LEVOLOR can also be wired directly to the power source for continuous operation. The controller has three (3) LED displays which illuminate to determine power on, sensor activated, and fill cycles.

SENSOR OVERIDE LOCK-OUT SYSTEM

1. This Levolor is equipped with a lock-out sequence which means, if the Levolor sensor has not been touched by water within the pre-set time cycle the controller turns the valve off for 24 hours and changes the fill light from green to red. The pre-set factory lock-out period is 20 minutes. This lock-out period can be field modified by cutting jumper A for a 40 minute lock-out or cutting jumpers A & B for a 60 minute lock-out period. To disable the lock-out feature completely cut jumper S-1.

2. SPA INSTALLATION - When installing Levolor on a spa (anything less than 300 square feet of surface area) reduce the flow rate of the valve by turning the flow control down.

3. For 110VAC or 220VAC operation, verify that the unit is marked for the correct input to be supplied to the unit. Connect the input power to the high power terminal. ALL LEVOLORS ARE MADE THE SAME- ALL 220 CONTROLLERS HAVE 2 BLACK WIRES AND ALL 110 CONTROLLERS HAVE A BLACK AND A WHITE WIRE. Connect black wires to 220VAC or connect white and black wires to 110VAC.

4. Connect the green safety ground to earth ground.

5. Connect the 24VAC water solenoid valve to 18 gauge solid wire using grease filled wire nuts. Then 18 gauge wire connects to blue wires in controller using small blue wire nuts. For valve connection - excess sensor wire should be used.

6. Two water-level sensors are shipped factory-connected to each end of the sensor. Use the half-moon shaped sensor to mount horizontally to an existing skimmer, or alternately use the round sensor to mount vertically, cutting off the unused end. Install the sensor in the appropriate location. Connect the two orange sensor wires to the sensor wire using small blue wire nuts. The wire to the sensors must be continuous.

Electronic Water Level Management Systems

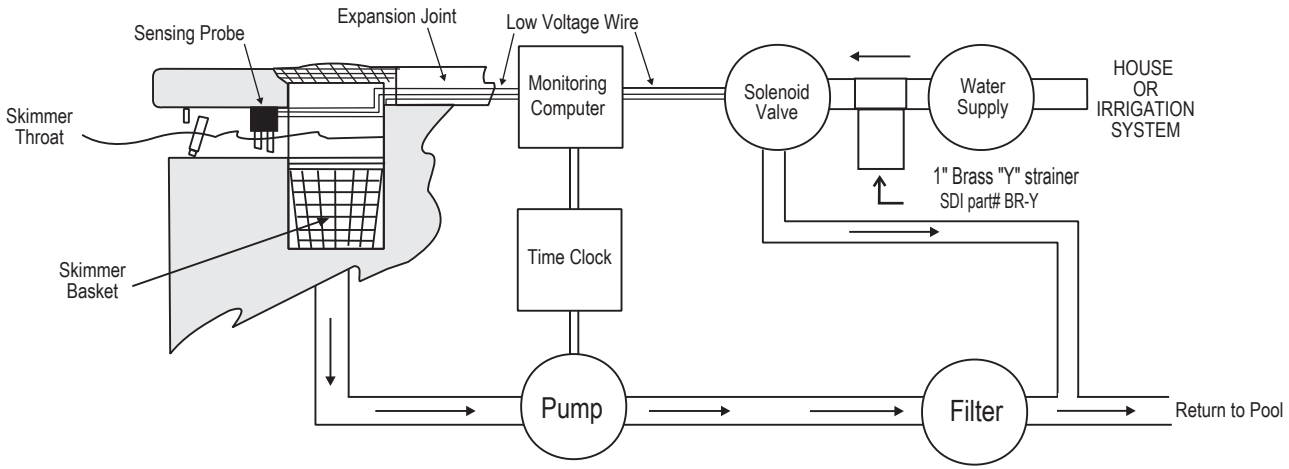

EXISTING INSTALLATION DIAGRAM

A 24VAC solenoid valve will provide water from a supply line to the pool or spa. Installing the supply line either before or after the filter at the equipment pad is acceptable or a dedicated line back to the pool. A 3/4 inch valve is the minimum recommended, and of course, an anti-siphon valve will provide inexpensive insurance against accidental draining of the pool. Always use an in-line strainer which can be purchased from SDI (part# BR-Y).

REMOTE SENSOR HOUSING DETAIL

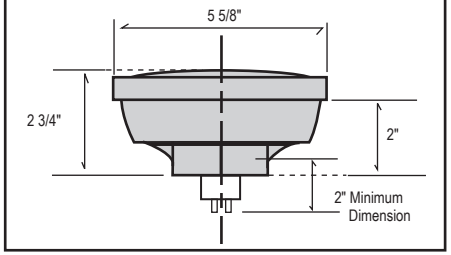

DECK LID INSTALLATION METHOD DETAILS

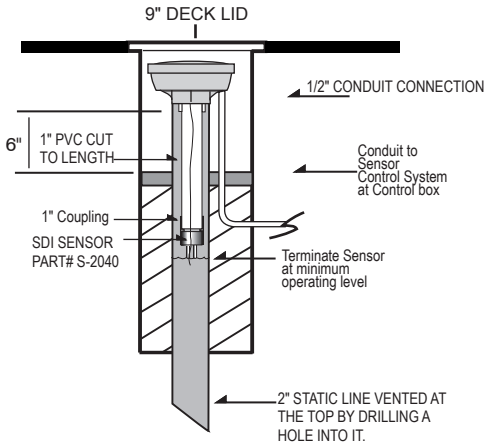

INSTALLATION METHOD DETAIL

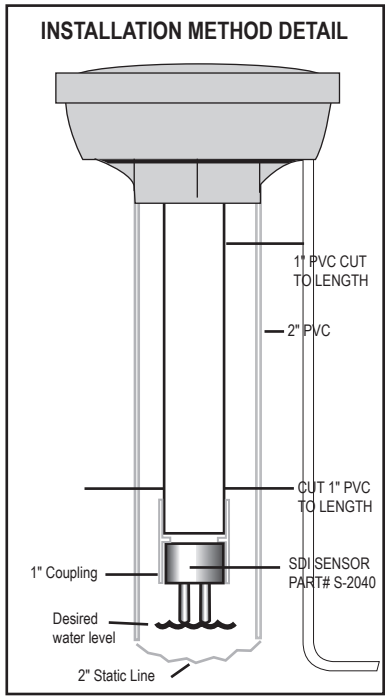

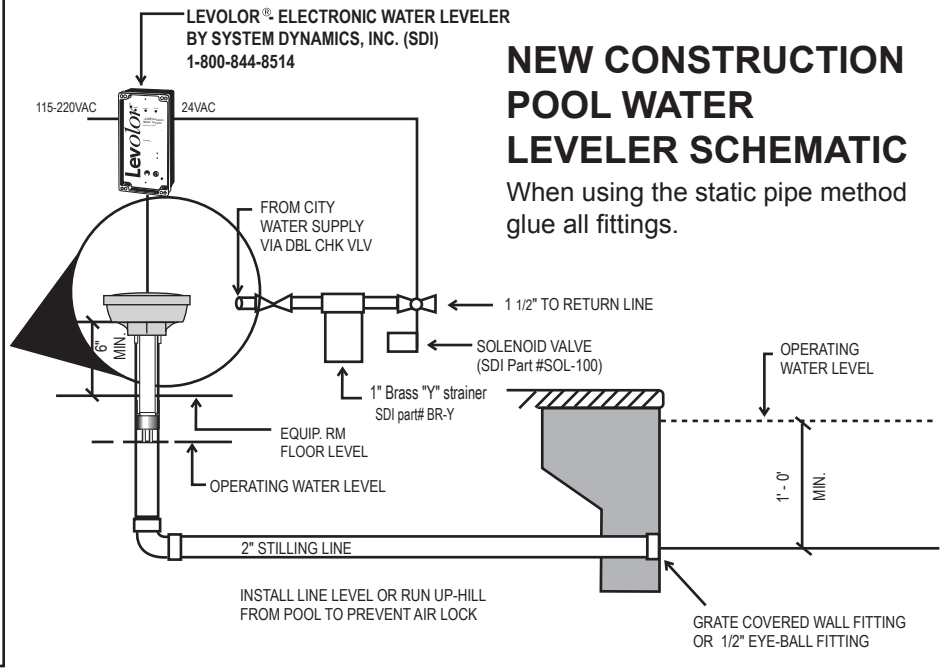

NEW CONSTRUCTION POOL WATER LEVELER SCHEMATIC

When using the static pipe method glue all fittings.

Parts supplied with S-2040. Sensor includes: Sensor w/50 ft. - 200 ft. of wire (do not splice wires) Remote Sensor Housing (RSH).